TE 70-ATC / TE 70

Bedienungsanleitung	de
Operating instructions	en
Mode d'emploi	fr
Manual de instrucciones	es
Istruzioni d'uso	it
Gebruiksaanwijzing	nl
Brugsanvisning	da
Bruksanvisning	no
Bruksanvisning	sv
Käyttöohje	fi
Manual de instruções	pt
Οδηγιες χρησεως	el
Lietošanas pamācība	lv
Instrukcija	lt
Kasutusjuhend	et

CE

1

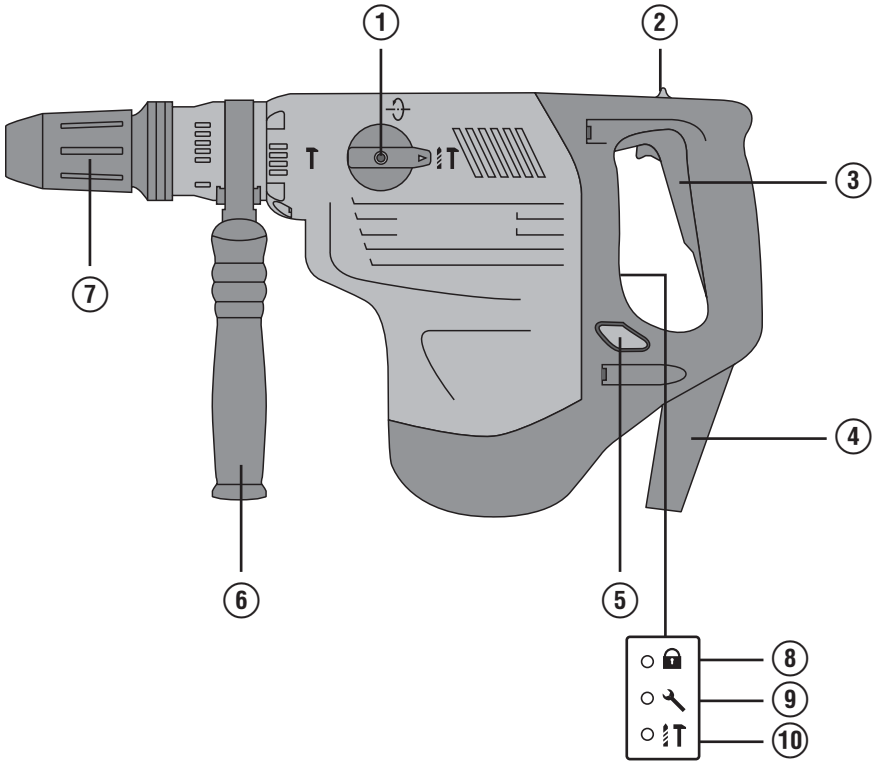

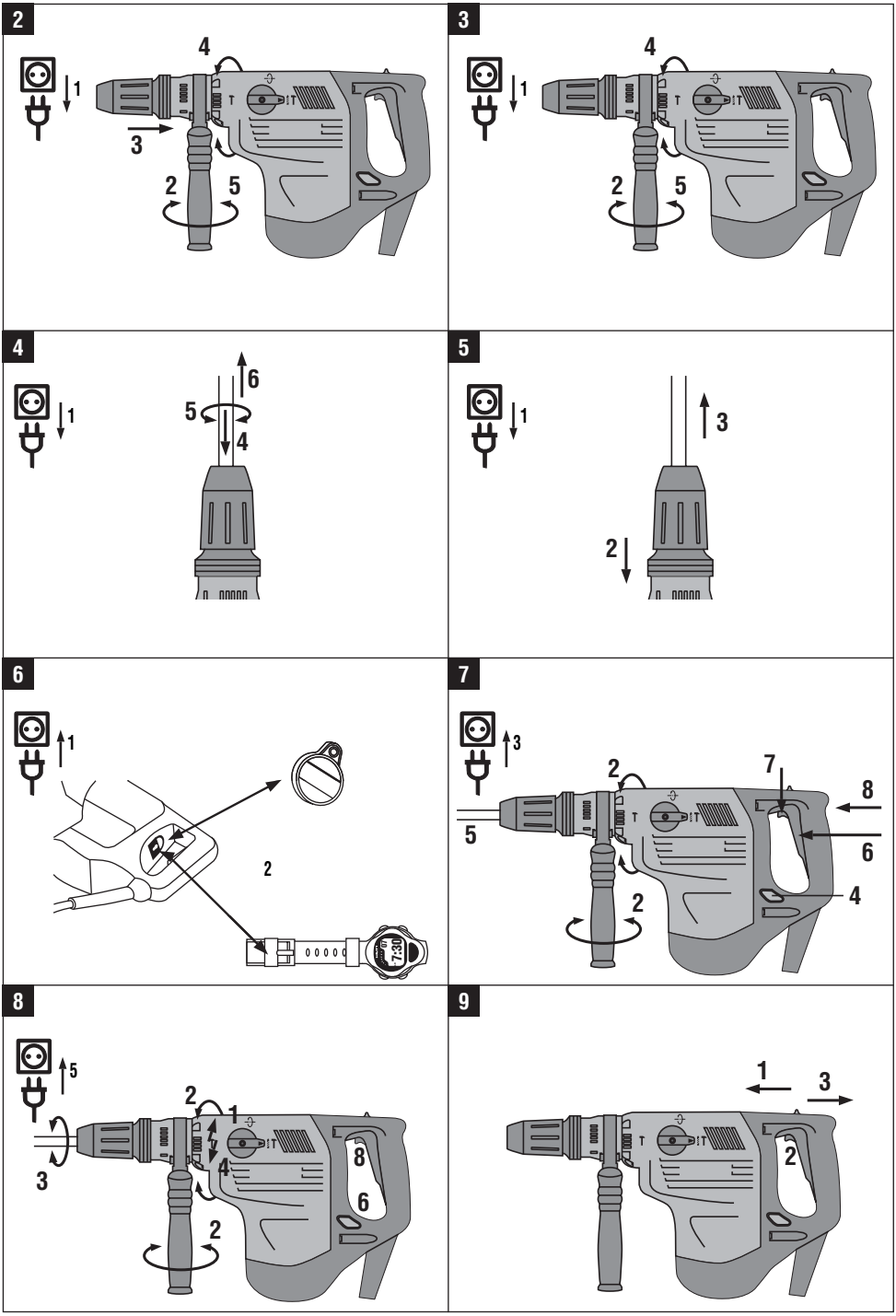
2
1
4
3
2
5
3
1
4
2
5
4
1
6
5
4
5
1
3
2
6
1
2
7:30
7
3
2
7
8
5
6
4
2
8
5
2
1
3
4
8
6
2
9
1
3
2

TE 70-ATC / TE 70 combi hammer

It is essential that the operating instructions are read before the power tool is operated for the first time.

Always keep these operating instructions together with the power tool.

Ensure that the operating instructions are with the power tool when it is given to other persons.

Contents	Page
1. General information	15
2. Description	16
3. Insert tools, accessories	18
4. Technical data	19
5. Safety rules	20
6. Before use	22
7. Operation	22
8. Care and maintenance	25
9. Troubleshooting	26
10. Disposal	27
11. Manufacturer's warranty - tools	27
12. EC declaration of conformity	28

1 These numbers refer to the corresponding illustrations. The illustrations can be found on the fold-out cover pages. Keep these pages open while studying the operating instructions.
In these operating instructions, the designation "the power tool" always refers to the TE 70-ATC / TE 70 combihammer.

en

Operating controls and indicators 1

① Function selector switch
② Control switch lock
③ Control switch
④ Supply cord
⑤ Power reduction button (50% power)
⑥ Side handle
⑦ Chuck
⑧ Insert tool lock
⑨ Theft protection indicator (option)
⑩ Service indicator
⑪ Reduced power indicator

1. General information

1.1 Safety notices and their meaning

WARNING
Draws attention to a potentially dangerous situation that could lead to serious personal injury or fatality.

CAUTION
Draws attention to a potentially dangerous situation that could lead to slight personal injury or damage to the equipment or other property.

NOTE
Draws attention to an instruction or other useful information.

1.2 Explanation of the pictograms and other information

Warning signs

General warning

Warning: electricity

Warning: hot surface

en

Obligation signs

Wear eye protection

Wear a hard hat

Wear ear protection

Wear protective gloves

Wear breathing protection

Symbols

Read the operating instructions before use

Return waste material for recycling.

Hammer drilling

Chiseling

Chisel position adjustment

V
Volts

A
Amps

W
Watts

Alternating current

Hz
Hertz

n_0
Rated speed under no load

/min
Revolutions per minute

Diameter

Double insulated

Equipped with theft protection system

Lock symbol

Location of identification data on the power tool

The type designation can be found on the type identification plate and the serial number on the side of the motor housing. Make a note of this data in your operating instructions and always refer to it when making an enquiry to your Hilti representative or service department.

Type: _____

Serial no.: _____

2. Description

2.1 Use of the product as directed

The power tool is an electrically-powered combihammer with pneumatic hammering mechanism. The ATC (Active Torque Control) function of the TE 70-ATC makes drilling more comfortable.

The tool is designed for drilling in concrete, masonry, metal and wood and can also be used for chiseling.

Under certain conditions, the power tool is suitable for use for mixing (see “Tools, accessories” and “Operation”).

Working on materials hazardous to the health (e.g. asbestos) is not permissible.
The power tool is designed for professional use and may be operated, serviced and maintained only by trained, authorized personnel. This personnel must be informed of any special hazards that may be encountered. The power tool and its ancillary equipment may present hazards when used incorrectly by untrained personnel or when used not as directed.
The working environment may be as follows: construction site, workshop, renovation, conversion or new construction.
The power tool may be used only in a dry environment.
Do not use the power tool where there is a risk of fire or explosion.
The power tool may be operated only when connected to a power supply providing a voltage and frequency in compliance with the information given on its type identification plate.
Modification of the power tool or tampering with its parts is not permissible.
To avoid the risk of injury, use only genuine Hilti accessories and insert tools.
Observe the information printed in the operating instructions concerning operation, care and maintenance.

2.2 Chuck

TE-Y (SDS max) quick-change “click” chuck

2.3 Switches

Speed control switch for smooth starting
Function selector switch: Hammer drilling, chiseling, chisel adjustment (24 positions)
Choice of full or reduced (50%) power
Control switch lockable for chiseling

2.4 Grips

Vibration-absorbing, pivotable side handle
Vibration-absorbing grip

2.5 Protective devices

Mechanical slip clutch
Electronic restart interlock to prevent the power tool starting unintentionally after an interruption in the electric supply (see section 9 “Troubleshooting”).
Additional ATC “Active Torque Control” (TE 70-ATC)

2.6 Lubrication

Gearing and hammering mechanism with separate lubrication chambers

2.7 TPS theft protection system (optional)

The power tool may be equipped with the TPS theft protection system as an option. If the power tool is equipped with this feature, it can be unlocked and made ready for operation only through use of the corresponding TPS key.

2.8 LED indicators

Service indicator LED (see section “Care and maintenance”)
Theft protection system indicator (optional) (see section “Operation”)
Reduced power indicator (see section “Operation”)

2.9 Items supplied as standard

1 Power tool
1 Side handle
1 Grease
1 Cleaning cloth
1 Operating instructions
1 Hilti toolbox

en

2.10 Using extension cords

Recommended minimum conductor cross section and max. cable lengths

Conductor cross section	1.5 mm²	2 mm²	2.5 mm²	3.5 mm²
Mains voltage 100V		30 m		50 m
Mains voltage 110-120 V	20 m	30 m	40 m	
Mains voltage 220-240 V	30 m		75 m	

2.11 Using a generator or transformer

This power tool may be powered by a generator or transformer when the following conditions are fulfilled: The unit must provide a power output in watts of at least twice the value printed on the type identification plate on the power tool. The operating voltage must remain within +5% and -15% of the rated voltage at all times, frequency must be in the 50 – 60 Hz range and never above 65 Hz, and the unit must be equipped with automatic voltage regulation and starting boost.
Never operate other power tools or appliances from the generator or transformer at the same time. Switching other power tools or appliances on and off may cause undervoltage and / or overvoltage peaks, resulting in damage to the power tool.

3. Insert tools, accessories

Hammer drill bits	Ø 12…45 mm
Breach bits	Ø 40…80 mm
Percussion core bits	Ø 45…150 mm
PCM diamond core bit	Ø 42…132 mm
Chisels	Pointed, flat and shaped chisels with TE-Y connection end
Wood drill bits	Ø 10…32 mm
Metal drill bits	Up to Ø 20 mm

TPS theft protection system with company card, company remote and TPS-K key	Option
Setting tool	Setting tool with TE-Y connection end
Quick-release chuck	Keyless chuck for wood and metal drill bits with smooth or hex. shank, 60208, Chuck holder 263359
Mixing paddles for non-flammable materials, with smooth or hex. shank	Ø 80…150 mm, For use only with the keyless quick-release chuck

4. Technical data

Right of technical changes reserved.

Power tool	TE 70-ATC	TE 70
Weight in accordance with EPTA procedure 01/2003	8.9 kg	7.7 kg
Dimensions (L x W x H)	524 mm x 294 mm x 123 mm	524 mm x 274 mm x 123 mm

en

NOTE
The power tool is available in various voltage ratings. Please refer to the type identification plate for details of the power tool's voltage and power rating.

Power tool	TE 70-ATC / TE 70
Rated input	1,600 W
Rated current input	Rated voltage 100 V: 15 A Rated voltage 110 V: 16 A Rated voltage 120 V: 15 A Rated voltage 220 V: 9.6 A; 1600 W Rated voltage 230 V: 9.8 A; 1600 W Rated voltage 240 V: 9.8 A; 1600 W
Mains frequency	50…60 Hz
Hammer drilling speed	360 r.p.m.
Single impact energy (full power)	11 Nm
Single impact energy (50% power)	6 Nm
Drilling performance in medium-hard concrete	Ø 20 mm: 143 cm³/min Ø 25 mm: 165 cm³/min Ø 32 mm: 180 cm³/min

NOTE
Information for users as per EN 61000-3-11: Switching on causes a brief drop in voltage. Other appliances may be negatively affected when connected to mains supplies where conditions are unfavorable. No malfunctions are to be expected on mains supplies with an impedance of less than <0.15 ohms.

Noise and vibration information (measured in accordance with EN 60745):

Typical A-weighted sound power level	110.5 dB (A)
Typical A-weighted emission sound pressure level.	99.5 dB (A)
Uncertainty for the given sound level	3 dB (A)
Triaxial vibration value for the TE 70-ATC (vibration vector sum)	measured in accordance with EN 60745-2-6
Hammer drilling in concrete, ($a_{h, HD}$)	20 m/s²
Chiseling, ($a_{h, Cheq}$)	18 m/s²
Triaxial vibration value for the TE 70 (vibration vector sum)	measured in accordance with EN 60745-2-6
Hammer drilling in concrete, ($a_{h, HD}$)	20 m/s²
Chiseling, ($a_{h, Cheq}$)	18 m/s²
Uncertainty (K) for triaxial vibration value	1.5 m/s²

Other information about the power tool

ATC electronic cut-out	TE 70-ATC
Protection class	Protection class II (double insulated)

en

5. Safety rules

5.1 General safety rules

WARNING! Read all instructions! Failure to follow all instructions listed below may result in electric shock, fire and/or serious injury. The term “power tool” in all of the warnings listed below refers to your mains-operated (corded) power tool or battery-operated (cordless) power tool. SAVE THESE INSTRUCTIONS.

5.1.1 Work area safety

a) **Keep work area clean and well lit.** Cluttered or dark areas invite accidents.

b) **Do not operate power tools in explosive atmospheres, such as in the presence of flammable liquids, gases or dust.** Power tools create sparks which may ignite the dust or fumes.

c) **Keep children and bystanders away while operating a power tool.** Distractions can cause you to lose control.

5.1.2 Electrical safety

a) **Power tool plugs must match the outlet. Never modify the plug in any way. Do not use any adapter plugs with earthed (grounded) power tools.** Unmodified plugs and matching outlets will reduce risk of electric shock.

b) **Avoid body contact with earthed or grounded surfaces such as pipes, radiators, ranges and refrigerators.** There is an increased risk of electric shock if your body is earthed or grounded.

c) **Do not expose power tools to rain or wet conditions.** Water entering a power tool will increase the risk of electric shock.

d) **Do not abuse the cord. Never use the cord for carrying, pulling or unplugging the power tool. Keep cord away from heat, oil, sharp edges or moving parts.** Damaged or entangled cords increase the risk of electric shock.

e) **When operating a power tool outdoors, use an extension cord suitable for outdoor use.** Use of a cord suitable for outdoor use reduces the risk of electric shock.

5.1.3 Personal safety

a) **Stay alert, watch what you are doing and use common sense when operating a power tool. Do not use a power tool while you are tired or under the influence of drugs, alcohol or medication.** A moment of inattention while operating power tools may result in serious personal injury.

b) **Use safety equipment. Always wear eye protection.** Safety equipment such as dust mask, non-skid safety shoes, hard hat, or hearing protection used for appropriate conditions will reduce personal injuries.

c) **Avoid accidental starting. Ensure the switch is in the off-position before plugging in.** Carrying power tools with your finger on the switch or plugging in power tools that have the switch on invites accidents.

d) **Remove any adjusting key or wrench before turning the power tool on.** A wrench or a key left attached to a rotating part of the power tool may result in personal injury.

e) **Do not overreach. Keep proper footing and balance at all times.** This enables better control of the power tool in unexpected situations.

f) **Dress properly. Do not wear loose clothing or jewellery. Keep your hair, clothing and gloves away from moving parts.** Loose clothes, jewellery or long hair can be caught in moving parts.

g) **If devices are provided for the connection of dust extraction and collection facilities, ensure these are connected and properly used.** Use of these devices can reduce dust-related hazards.

5.1.4 Power tool use and care

a) **Do not force the power tool. Use the correct power tool for your application.** The correct power tool will do the job better and safer at the rate for which it was designed.

b) **Do not use the power tool if the switch does not turn it on and off.** Any power tool that cannot be

controlled with the switch is dangerous and must be repaired.

c) **Disconnect the plug from the power source and/or the battery pack from the power tool before making any adjustments, changing accessories, or storing power tools.** Such preventive safety measures reduce the risk of starting the power tool accidentally.

d) **Store idle power tools out of the reach of children and do not allow persons unfamiliar with the power tool or these instructions to operate the power tool.** Power tools are dangerous in the hands of untrained users.

e) **Maintain power tools. Check for misalignment or binding of moving parts, breakage of parts and any other condition that may affect the power tool's operation. If damaged, have the power tool repaired before use.** Many accidents are caused by poorly maintained power tools.

f) **Keep cutting tools sharp and clean.** Properly maintained cutting tools with sharp cutting edges are less likely to bind and are easier to control.

g) **Use the power tool, accessories and tool bits etc., in accordance with these instructions and in the manner intended for the particular type of power tool, taking into account the working conditions and the work to be performed.** Use of the power tool for operations different from those intended could result in a hazardous situation.

5.1.5 Service

a) **Have your power tool serviced by a qualified repair person using only identical replacement parts.** This will ensure that the safety of the power tool is maintained.

5.2 Additional safety instructions

5.2.1 Personal safety

a) **Wear ear protectors.** Exposure to noise can cause hearing loss.

b) **Use auxiliary handles supplied with the tool.** Loss of control can cause personal injury.

c) **Always hold the power tool securely with both hands on the grips provided. Keep the grips dry, clean and free from oil and grease.**

d) **Breathing protection must be worn if the power tool is used without a dust removal system for work that creates dust.**

e) **Improve the blood circulation in your fingers by relaxing your hands and exercising your fingers during breaks between working.**

f) **Avoid touching rotating parts. Switch the power tool on only after bringing it into position at the workpiece.** Touching rotating parts, especially rotating insert tools, may lead to injury.

g) **Always lead the supply cord and extension cord away from the power tool to the rear while working.** This helps to avoid tripping over the cord while working.

h) **When using the power tool for mixing, set the function selector switch to "Hammer drilling" and wear protective gloves.**

5.2.2 Power tool use and care

a) **Secure the workpiece. Use clamps or a vice to secure the workpiece.** The workpiece is thus held more securely than by hand and both hands remain free to operate the power tool.

b) **Check that the insert tools used are compatible with the chuck system and that they are secured in the chuck correctly.**

c) **Always work from a secure, safe stance.**

5.2.3 Electrical safety

a) **Before beginning work, check the working area (e.g. using a metal detector) to ensure that no concealed electric cables or gas and water pipes are present.** External metal parts of the power tool may become live, for example, when an electric cable is damaged accidentally. This presents a serious risk of electric shock.

b) **Check the power tool's supply cord at regular intervals and have it replaced by a qualified specialist if found to be damaged. Check extension cords at regular intervals and replace them if found to be damaged. Do not touch the supply cord or extension cord if it is damaged while working. Disconnect the supply cord plug from the power outlet.** Damaged supply cords or extension cords present a risk of electric shock.

c) **Dirty or dusty power tools which have been used frequently for work on conductive materi-**

als should be checked at regular intervals at a Hilti Service Center. Under unfavorable circumstances, dampness or dust adhering to the surface of the power tool, especially dust from conductive materials, may present a risk of electric shock.

d) **When working outdoors with an electric tool or machine, check to ensure that the tool or machine is connected to the electric supply by way of a ground fault circuit interrupter (RCD) with a rating of max. 30 mA (tripping current).** Use of a ground fault circuit interrupter reduces the risk of electric shock.

e) **Use of a ground fault circuit interrupter (RCD residual current device) with a maximum tripping current of 30 mA is recommended.**

5.2.4 Work area

a) **Ensure that the workplace is well lit.**

b) **Ensure that the workplace is well ventilated.** Exposure to dust at a poorly ventilated workplace may result in damage to the health.

c) **If the work involves breaking right through, take the appropriate safety measures at the opposite side**. Parts breaking away could fall out and / or fall down and injure other persons.

5.2.5 Personal protective equipment

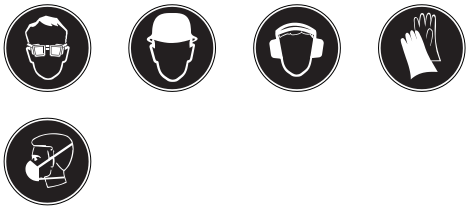

The user and any other persons in the vicinity must wear suitable eye protection, a hard hat, ear protection, protective gloves and breathing protection while the power tool is in use.

6. Before use

6.1 Fitting and adjusting the side handle 2

1. Disconnect the supply cord plug from the power outlet.
2. Release the side handle clamping band by turning the handle counterclockwise.
3. Slide the side handle clamping band over the chuck and onto the cylindrical section at the front end of the power tool.
4. Pivot the side handle into the desired position.
5. **CAUTION Check that the clamping band is engaged in the groove provided on the power tool.**
   Secure the side handle by turning the grip clockwise.

6.2 Use of extension cords and generators or transformers

Please refer to section 2 “Description”.

7. Operation

CAUTION
In accordance with the applications for which it is designed, the power tool produces a high torque. **Always use the side handle and hold the power tool with both hands.** The user must be prepared for sudden sticking and stalling of the insert tool.

CAUTION
Use clamps or a vice to hold the workpiece securely.

CAUTION
The collar at the front end of the gearing section is not to be used as a gripping surface.

7.1 Preparing for use

CAUTION
Wear protective gloves when changing insert tools as the insert tools get hot during use.

7.1.1 Fitting the insert tool 3

1. Disconnect the supply cord plug from the power outlet.
2. Check that the connection end of the insert tool is clean and lightly greased. Clean it and grease it if necessary.
3. Check that the sealing lip of the dust shield is clean and in good condition. Clean the dust shield if necessary or have it replaced if the sealing lip is damaged.
4. Push the insert tool into the chuck and rotate it while applying slight pressure until it engages in the guide grooves.
5. Push the insert tool further into the chuck until it is heard to engage.
6. Check that the insert tool has engaged correctly by pulling it.

7.1.2 Removing the insert tool 4

1. Disconnect the supply cord plug from the power outlet.
2. Open the chuck by pulling back the insert tool locking sleeve.
3. Pull the insert tool out of the chuck.

7.2 Operation

CAUTION
Working on the material may cause it to splinter. **Wear eye protection and protective gloves. Wear breathing protection if no dust removal system is used.** Splintering material presents a risk of injury to the eyes and body.

CAUTION
The work generates noise. **Wear ear protectors.** Exposure to noise can cause hearing loss.

CAUTION
Switch the power tool on only after bringing it into the working position.

CAUTION
Do not operate the function selector switch while the motor is running.

en

7.2.1 TPS theft protection system (optional)

NOTE
The power tool may be equipped with the optional theft protection system. If the power tool is equipped with this feature, it can be unlocked and made ready for operation only through use of the corresponding TPS key.

7.2.1.1 Unlocking the power tool 5

1. Plug the supply cord into the power outlet. The yellow theft protection indicator LED blinks. The power tool is now ready to receive the signal from the TPS key.
2. Hold the TPS key or the TPS watch strap buckle against the lock symbol. The power tool is unlocked as soon as the yellow theft protection indicator LED no longer lights.
   NOTE If, for example, the electric supply is briefly interrupted due to a power failure or disconnected when moving to a different workplace, the power tool remains ready for operation for approx. 20 minutes. In the event of a longer interruption, the TPS key must be used again to unlock the power tool.

7.2.1.2 Activation of the theft protection system for the power tool

NOTE
Further detailed information on activation and use of the theft protection system can be found in the operating instructions for the theft protection system.

7.2.2 Hammer drilling 6

NOTE
Working at low temperatures: The hammering mechanism works only when the power tool has reached a minimum operating temperature. Bring the tip of the drill bit or chisel into contact with the workpiece and allow the power tool to run under no load until it reaches the minimum operating temperature. If ne-

cessary, repeat this procedure until the hammering mechanism begins to operate.

1. Turn the function selector switch until it engages in the “Hammer drilling” position.
2. Bring the side handle into the desired position and check that it is fitted correctly and secured.
3. Plug the supply cord into the power outlet.
4. Set the drilling power.
   NOTE After connecting the supply cord to the electric supply, the power tool is always set to full drilling power.
   NOTE To set the power tool to reduced (50%) drilling power, press the “reduced power” button. The drilling power LED then lights. To reselect full drilling power, press the “reduced power” button again.
5. Position the power tool and drill bit at the point where the hole is to be drilled.
6. Press the control switch slowly (drill at a low speed until the drill bit centers itself in the hole).
7. Press the control switch fully to continue working at full power.
8. Do not apply excessive pressure. This will not increase the power tool’s hammering performance. Lower pressure extends the life of the insert tool.
9. Reduce drilling speed shortly before breaking through in order to avoid damage to the surface at the rear side.

7.2.3 Active Torque Control (TE 70-ATC)

In addition to the mechanical slip clutch, the power tool is also equipped with the Active Torque Control system. This system offers additional comfort while drilling as it causes rapid shutdown upon sudden rotation of the power tool about the drill bit axis, e.g. when the drill bit sticks due to hitting a rebar or when the drill bit is tilted unintentionally. When the torque control system has become activated, the power tool can be restarted by releasing the control switch and re-engaging it after the motor has stopped rotating (a “click” indicates that the power tool is again ready for operation). Always choose a working position in which the electric tool is free to rotate in a clockwise direction (as seen by the operator). If this rotation is not possible, the ATC system will be unable to react.

7.2.4 Chiseling 7

NOTE
The chisel can be adjusted to 24 different positions (in 15° increments). This ensures that flat chisels and shaped chisels can always be set to the optimum working position.

CAUTION
Do not operate the power tool when the selector switch is set to “Chisel adjustment”.

1. To adjust the position of the chisel, turn the function selector switch until it engages in the “Chisel adjustment” position.
2. Bring the side handle into the desired position and check that it is fitted correctly and secured.
3. Rotate the chisel to the desired position.
4. To lock the chisel in the desired position, turn the function selector switch until it engages in the “Chiseling” position. Do not operate the function selector switch while the motor is running.
5. To begin chiseling, plug the power tool’s supply cord into the power outlet.
6. Set the desired chisel position.
   NOTE After connecting the supply cord to the electric supply, the power tool is always set to full chiseling power.
   NOTE To set the power tool to reduced (50%) chiseling power, press the “reduced power” button. The chiseling power LED then lights. To reselect full chiseling power, press the “reduced power” button again.
7. Position the tip of the chisel at the point where chiseling is to begin.
8. Press the control switch fully.

7.2.5 Drilling without hammering

Drilling without hammering is possible when drill bits with a special connection end are used. Drill bits of this kind are available form Hilti. For example, when the keyless quick-release chuck is fitted, smooth-shank drill bits for wood or steel can be used to drill without hammering. The function selector switch must be set to the “Hammer drilling” position when the power tool is used in this way.

7.2.6 Control switch lock 8

When chiseling, the control switch can be locked in the “on” position.

1. Push the control switch lock above the grip forward.
2. Press the control switch fully.
   The power tool then operates in sustained mode.

3. To cancel sustained operating mode, slide the control switch lock to the rear.
   The power tool then switches off.

7.2.7 Mixing

1. Turn the function selector switch until it engages in the “Hammer drilling” position.
2. Insert the quick-release chuck in the power tool’s chuck.
3. Insert the mixing paddle.
4. Check that the insert tool has engaged correctly by pulling it.
5. Bring the side handle into the desired position and check that it is fitted correctly and secured.
6. Plug the supply cord into the power outlet.
7. Position the mixing paddle in the container holding the substance to be mixed.
8. To begin mixing, press the control switch slowly.
9. Press the control switch fully to continue working at full power.
10. Guide the mixing paddle carefully in order to avoid splashing and spillage.

en

8. Care and maintenance

CAUTION
Disconnect the supply cord plug from the power outlet.

8.1 Care of insert tools

Clean off dirt and dust deposits adhering to the insert tools and protect them from corrosion by wiping the insert tools from time to time with an oil-soaked rag.

8.2 Care of the power tool

The outer casing of the power tool is made from impact-resistant plastic. Sections of the grip are made from a synthetic rubber material.

Never operate the power tool when the ventilation slots are blocked. Clean the ventilation slots carefully using a dry brush. Do not permit foreign objects to enter the interior of the power tool. Clean the outside of the power tool at regular intervals with a slightly damp cloth. Do not use a spray, steam pressure cleaning equipment or running water for cleaning. This may negatively affect the electrical safety of the power tool. Always keep the grip surfaces of the power tool free from oil and grease. Do not use cleaning agents which contain silicone.

8.3 Service indicator

NOTE
The power tool is equipped with a service indicator.

Indicator	Constant red light	End of service interval - servicing is due. After the lamp lights for the first time, the power tool may continue to be used for several hours before the automatic cut-out is activated. To ensure that the power tool is always ready for use, it should be returned to Hilti for servicing in good time.
	Blinking red light	See section “Troubleshooting”.

8.4 Maintenance

WARNING
Repairs to the electrical section of the power tool may be carried out only by trained electrical specialists.

Check all external parts of the power tool for damage at regular intervals and check that all controls operate faultlessly. Do not operate the power tool if parts are damaged or when the controls do not function faultlessly. If necessary, the power tool should be repaired by Hilti Service.

8.5 Checking the power tool after care and maintenance

After carrying out care and maintenance work on the power tool, check that all protective and safety devices are fitted and that they function faultlessly.

en

9. Troubleshooting

Fault	Possible cause	Remedy
The power tool doesn't start.	Interruption in the electric supply.	Plug in another electric appliance and check whether it works.
	The supply cord or plug is defective.	Have it checked by a trained electrical specialist and replaced if necessary.
	Generator with sleep mode.	Apply a load to the generator by connecting another appliance (e.g. a lamp). Subsequently switch the power tool off and on again.
	Other electrical fault.	Have it checked by a trained electrical specialist.
	The electronic restart interlock is activated after an interruption in the electric supply.	Switch the power tool off and on again.
No hammering action.	The power tool is too cold.	Allow the power tool to warm up to the minimum operating temperature. See section: 7.2.2 Hammer drilling 6
The power tool doesn't start and the LED blinks red.	A fault has occurred in the power tool.	If necessary, the power tool should be repaired by Hilti Service.
The power tool doesn't start and the LED lights red.	The carbon brushes are worn.	Have it checked by a trained electrical specialist and replaced if necessary.
The power tool doesn't start and the indicator lamp blinks yellow.	The power tool has not been unlocked (power tools with optional theft protection system).	Use the TPS key to unlock the power tool.
The power tool doesn't achieve full power.	The extension cord is too long or its gauge is inadequate.	Use an extension cord of an approved length and / or of adequate gauge.
	The control switch is not pressed fully.	Press the control switch as far as it will go.
	The "Reduced power" (50% power) button is engaged.	Press the "Reduced power" button.
	The voltage provided by the electric supply is too low.	Connect the power tool to a different power source.

Fault	Possible cause	Remedy
The drill bit doesn't rotate.	The function selector switch is not engaged or is in the "Chiseling" or "Chisel adjustment" position.	When the motor has stopped, move the function control switch to the "Drilling without hammering" or "Hammer drilling" position.
The drill bit / chisel can't be released from the chuck.	The chuck is not pulled back fully.	Pull the chuck back as far as it will go and remove the insert tool.
	The side handle is not fitted correctly.	Release the side handle and refit it correctly so that the clamping band and side handle engage in the groove.

en

10. Disposal

Most of the materials from which Hilti power tools or appliances are manufactured can be recycled. The materials must be correctly separated before they can be recycled. In many countries, Hilti has already made arrangements for taking back your old power tools or appliances for recycling. Please ask your Hilti customer service department or Hilti representative for further information.

For EC countries only

Disposal of electric tools together with household waste is not permissible.

In observance of European Directive 2002/96/EC on waste electrical and electronic equipment and its implementation in accordance with national law, electric tools that have reached the end of their life must be collected separately and returned to an environmentally compatible recycling facility.

11. Manufacturer's warranty - tools

Hilti warrants that the tool supplied is free of defects in material and workmanship. This warranty is valid so long as the tool is operated and handled correctly, cleaned and serviced properly and in accordance with the Hilti Operating Instructions, and the technical system is maintained. This means that only original Hilti consumables, components and spare parts may be used in the tool.

This warranty provides the free-of-charge repair or replacement of defective parts only over the entire lifespan of the tool. Parts requiring repair or replacement as a result of normal wear and tear are not covered by this warranty.

Additional claims are excluded, unless stringent national rules prohibit such exclusion. In particular, Hilti is not obligated for direct, indirect, incidental or consequential damages, losses or expenses in connection with, or by reason of, the use of, or inability to use the tool for any purpose. Implied warranties of merchantability or fitness for a particular purpose are specifically excluded.

For repair or replacement, send the tool or related parts immediately upon discovery of the defect to the address of the local Hilti marketing organization provided.

This constitutes Hilti's entire obligation with regard to warranty and supersedes all prior or contemporaneous comments and oral or written agreements concerning warranties.

12. EC declaration of conformity

en

Designation:	Combi hammer
Type:	TE 70-ATC / TE 70
Year of design:	2006

We declare, on our sole responsibility, that this product complies with the following directives and standards: 2004/108/EC, 98/37/EC, EN 55014-1, EN 55014-2, EN 60745-1, EN 60745-2-6, EN 61000-3-2, EN 61000-3-11.

Hilti Corporation

Peter Cavada
Head of BU Quality and Process Management
Business Area Electric Tools & Accessories
06 2007

Jan Doongaji
Senior Vice President
Business Unit Drilling and Demolition
06 2007

Hilti Corporation
LI-9494 Schaan
Tel.: +423 / 234 21 11
Fax: +423 / 234 29 65
www.hilti.com

Hilti = registered trademark of Hilti Corp., Schaan W 3255 0807 00-Pos. 1 1 Printed in Liechtenstein © 2007
Right of technical and programme changes reserved S. E. & O.

236490 / B

236490