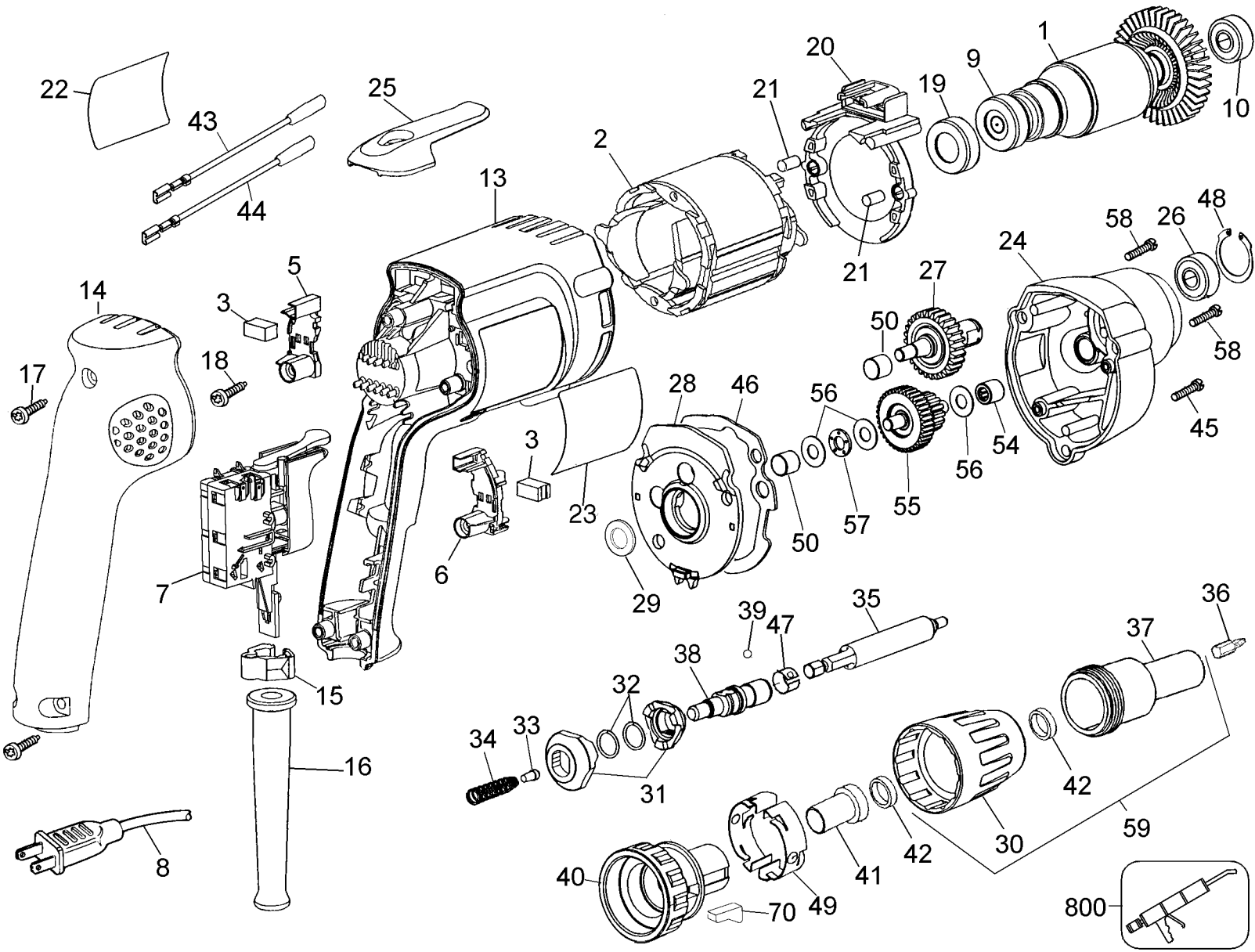

1
2
3
5
6
7
8
9
10
13
14
15
16
17
18
19
20
21
22
23
24
25
26
27
28
29
30
31
32
33
34
35
36
37
38
39
40
41
42
43
44
45
46
47
48
49
50
54
55
56
57
58
59
70
800

Parts List for DW276 Type 5

Item Number	Part Number	Description	Qty Required
1	176853-00SV	ARMATURE & FAN	1
2	620360-03SV	FIELD & LEADS	1
3	176846-04	BRUSH	2
5	390004-00	BR.HOLDER,L	1
6	390003-00	BR.HOLDER,R	1
7	621884-00	SWITCH	1
8	330072-98	CORD/8FT/18-2SJ	1
8	330081-98	CORD/50'/16-2SJ	1
8	330077-98	CORD/8FT/18-2S	1
9	330003-04	BEARING,BALL	1
10	330003-04	BEARING,BALL	1
13	396969-14	FIELD CASE	1
14	176816-06	HANDLE COVER	1
15	176829-00	CLAMP,CORD	1
15	176832-00	CLAMP,CORD	1
15	176833-00	CLAMP,CORD	1
16	330005-01	PROTECTOR,CORD	1
16	148809-00	PROTECTOR,CORD	1
17	330019-13	SCREW,M4X19	3
18	176951-00	SCREW	2
19	389824-00	CUP	1
20	176811-00	BAFFLE	1
21	949638-02	PLUG,RUBBER	2
22	395047-00	ID LABEL	1
23	N295352	NAME PLATE	1
24	176709-00SV	CASE-GEAR	1
25	N045425	BELT CLIP	1

COPYRIGHT© 2005. All Rights Reserved.
Parts list, pricing, and availability subject to change. Please visit www.dewaltservicenet.com for current parts information.

Parts List for DW276 Type 5

Item Number	Part Number	Description	Qty Required
26	330003-09	BEARING,BALL	1
27	176708-00SV	SPINDLE & GEAR	1
28	388761-00	GEAR CASE COVER	1
29	023813-00	WASHER	1
30	152492-01	COLLAR,ADJUST	1
31	96558-00	CLUTCH	2
32	089210-00	RET RING	2
33	021287-00	GUIDE	1
34	86211-00	SPRING	1
35	619773-02	BIT TIP HOLDER	1
36	607904-22	BIT,SCREWDRIVER	1
37	612001-00SV	LOCATOR	1
38	176697-00	SPINDLE	1
39	696631-00	BALL	1
40	176632-00	HOUSING,CLUTCH	1
41	450907-00	BEARING,SLEEVE	1
42	696534-00	SEAL	2
43	616118-02	LEADWIRE ASSY.	1
44	616118-03	LEADWIRE ASSY.	1
45	330019-14	SCREW	3
46	176655-00	GASKET	1
47	094518-00	RETAINER	1
48	087692-00	RET RING	1
49	391436-00	DETENT SPRING	2
50	093128-00	NEEDLE BEARING	2
54	330004-00	BEARING,NEEDLE	1
55	176731-00SV	SPINDLE & GEAR	1

COPYRIGHT© 2005. All Rights Reserved.
Parts list, pricing, and availability subject to change. Please visit www.dewaltservicenet.com for current parts information.

Parts List for DW276 Type 5

Item Number	Part Number	Description	Qty Required
56	176732-00	WASHER,THRUST	3
57	143079-00	WASHER,THRUST	1
58	330019-16	SCREW	2
59	429561-00	NOSEPIECE,ALUM.	1
70	390437-01	RUBBER PLUG	2
800	284778-00	GREASE,MOLYKOTE	1
800	761995-01	GREASE, 6 OZ.	1
800	283484-01	GREASE,32 OZ.	1

COPYRIGHT© 2005. All Rights Reserved.
Parts list, pricing, and availability subject to change. Please visit www.dewaltservicenet.com for current parts information.